Electrical connection clamp for wire/cable and contact wire

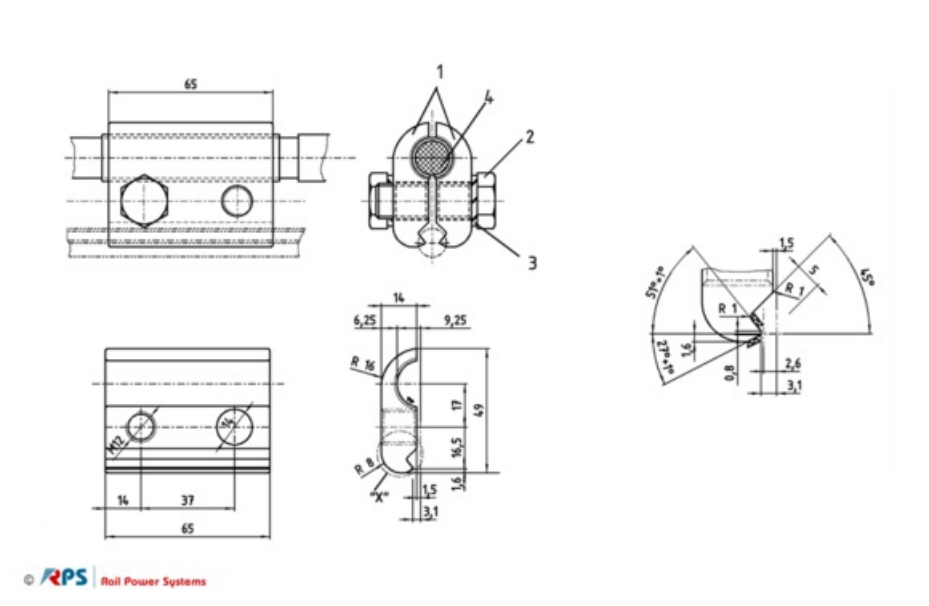

Material-ID	Name	Weight	Rope Q	Drawing Number
3EGF006169	Electrical connection clamp	0,60 kg	95 flex mm²	GVT3506478 III
3EGF006188	Electrical connection clamp	0,60 kg	107 flex mm²	GVT3506714 I
3EGF006168	Electrical connection clamp	0,60 kg	120 flex mm²	GVT3506478 II
3EGF006167	Electrical connection clamp	0,60 kg	150 flex mm²	GVT3506478 I

© 2024 - Rail Power Systems GmbH