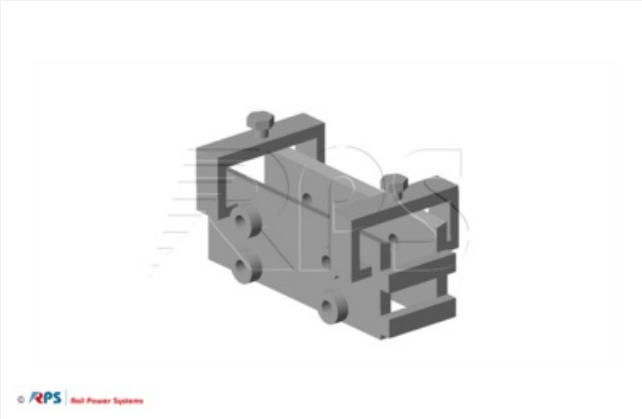

OCR drilling template

© 2024 - Rail Power Systems GmbH